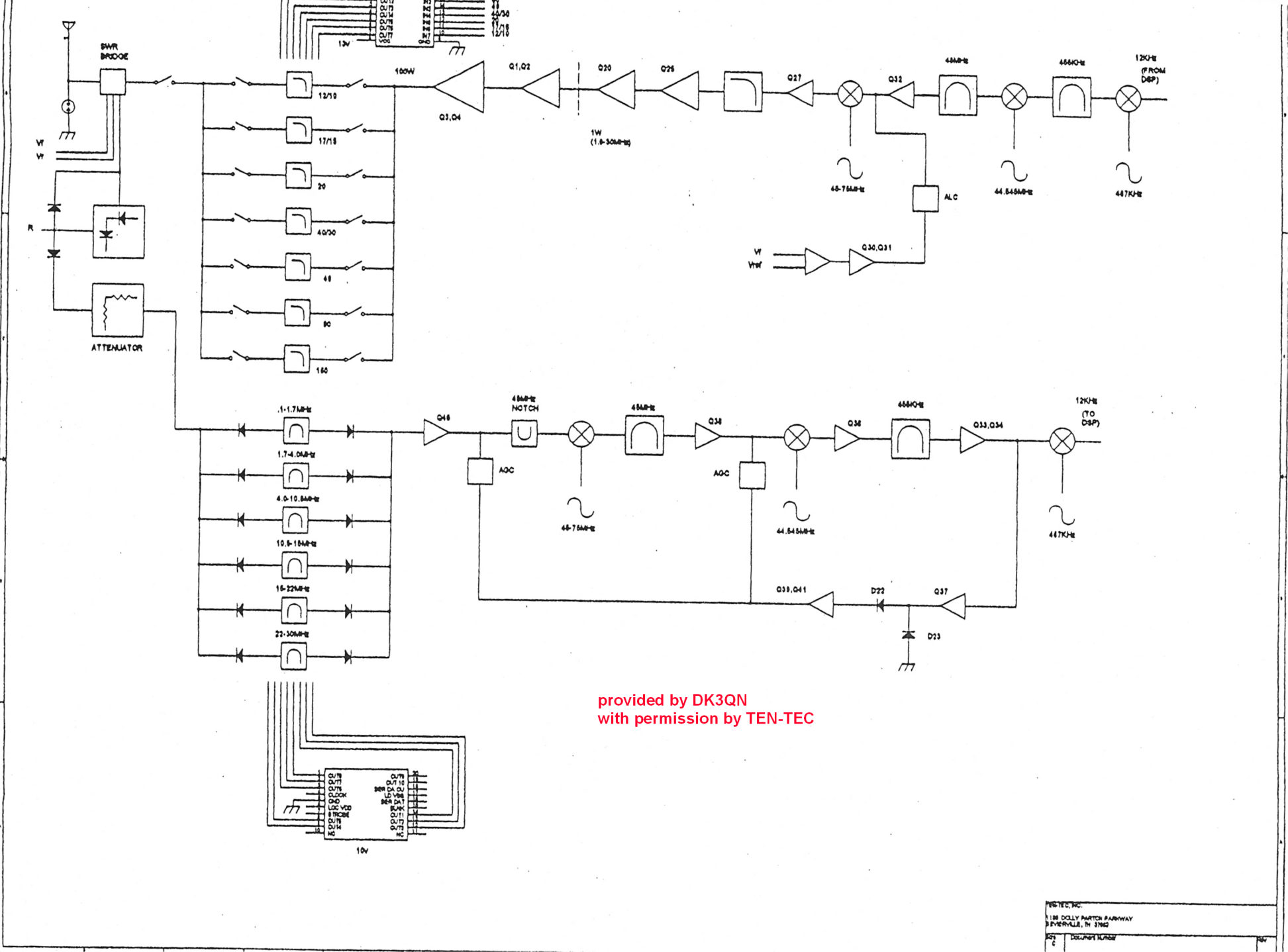


provided by DK3QN
with permission by TEN-TEC

TEN-TEC, INC.
1185 DOLLY PARTON PARKWAY
SEVIERVILLE, TN 37862
SIZE C
DOCUMENT NUMBER
REV